Work Order ID 61764

Thursday, September 02, 2010 11:18:22 AM

Item ID: D350-748-101 **Accept** **Setup Start** **Stop**

Revision ID:

Item Name: Crosstube Installation, High Fwd

Start Date: 9/2/2010 **Start Qty:** 1.00 **Cust Item ID:**

Required Date: 9/20/2010 **Req'd Qty:** 1.00 **Customer:**

Reference:

Approvals: **Process Plan:** M **Date:** 10-9-02 **Tooling:** _____ **Date:** _____ **Run Start** **Stop**

QC: _____ **Date:** _____ **SPC (Y/N):** _____ **Date:** _____

Sequence ID/ Work Center ID	Operation Description	Set Up/ Run Hours	Tool ID	Tool #	Plan Code	Accept Qty	Reject Qty	Reject Number	Insp. Stamp
Draw Nbr	**Revision Nbr**								
D350-748-141	Rev E								
100	DOCUMENT CONTROL	0.00							
DC	**Memo**	0.00							
Document Control	Photocopy bluefile & type labels per PPPD350-748-101				CHG001				
110	BENDING MACHINE - CROSSTUBES	0.00							
CNC Bend 1	**Memo**	0.00							
CNC Delta 100 Bender	Bend tube as per Dwg D350-748-141 using CNC bender program D350F and Folio FT_____								
120	QC15- Crosstube Dimensional Check	0.00							
QC	**Memo**	0.00							
Quality Control									

10-11-22

10/14/22

Dart Aerospace Ltd

W/O: 61764	WORK ORDER CHANGES						
DATE	STEP	PROCEDURE CHANGE	By	Date	Qty	Approval Chief Eng / Prod Mgr	Approval QC Inspector
10.12.09	141	-DEFLECT TUBE TO 3500 lb FOR ~~10 SEC.~~ 1 MINUTE -MEASURE HEIGHT & WIDTH	GP	10.12.09	1	GP 10.12.09 QS1042	S 10/12/13
10.12.09	142	NDT TUBE FOLLOWING DEFLECTION TEST				GP 10.12.09 QS1042	

Part No: D350-748-101 PAR #: _____ Fault Category: _____ NCR: Yes No DQA: _____ Date: _____

Resolution: _____ Disposition: _____ QA: N/C Closed: _____ Date: _____

NCR:	WORK ORDER NON-CONFORMANCE (NCR)							
DATE	STEP	Description of NC Section A	Corrective Action Section B			Verification Section C	Approval Chief Eng	Approval QC Inspector
			Initial Chief Eng	Action Description Chief Eng	Sign & Date			

NOTE: Date & initial all entries

H:\fFORMS\Quality Assurance\approved QA\NCRWO RevE

Work Order ID 61764

Thursday, September 02, 2010 11:18:22 AM

Item ID: D350-748-101 **Accept** **Setup Start** **Stop**

Revision ID:

Item Name: Crosstube Installation, High Fwd

Start Date: 9/2/2010 **Start Qty:** 1.00 **Cust Item ID:**

Required Date: 9/20/2010 **Req'd Qty:** 1.00 **Customer:**

Reference:

Run Start **Stop**

Approvals: **Process Plan:** _____ **Date:** _____ **Tooling:** _____ **Date:** _____

QC: _____ **Date:** _____ **SPC (Y/N):** _____ **Date:** _____

Sequence ID/ Work Center ID	Operation Description	Set Up/ Run Hours	Tool ID	Tool #	Plan Code	Accept Qty	Reject Qty	Reject Number	Insp. Stamp
125 HandFXtube Hand Finishing Crosstubes	**Memo** ***Stress relief*** Heat treat crosstube as per QSI010 4.3	0.00 0.00							
127 QC Quality Control	QC5- Inspect part completeness to step on W/O **Memo**	0.00 0.00							

SAP DP 10-11-27

3pm to 7pm

S Wolutzy

Re filled out PAZ sheet to reflect Omi's after heat treat.

S Wolutzy

Dart Aerospace Ltd

W/O:		WORK ORDER CHANGES					
DATE	STEP	PROCEDURE CHANGE	By	Date	Qty	Approval Chief Eng / Prod Mgr	Approval QC Inspector

Part No: _____ PAR #: _____ Fault Category: _____ NCR: Yes No DQA: _____ Date: _____

Resolution: _____ Disposition: _____ QA: N/C Closed: _____ Date: _____

NCR:		WORK ORDER NON-CONFORMANCE (NCR)						
DATE	STEP	Description of NC Section A	Corrective Action Section B			Verification Section C	Approval Chief Eng	Approval QC Inspector
			Initial Chief Eng	Action Description Chief Eng	Sign & Date			

NOTE: Date & initial all entries

H:\fFORMS\Quality Assurance\approved QA\NCRWO RevE

Work Order ID 61764

Thursday, September 02, 2010 11:18:22 AM

Item ID: D350-748-101 **Accept** **Setup Start** **Stop**

Revision ID:

Item Name: Crosstube Installation, High Fwd

Start Date: 9/2/2010 **Start Qty:** 1.00 **Cust Item ID:**

Required Date: 9/20/2010 **Req'd Qty:** 1.00 **Customer:**

Reference:

Run Start **Stop**

Approvals: **Process Plan:** _____ **Date:** _____ **Tooling:** _____ **Date:** _____

QC: _____ **Date:** _____ **SPC (Y/N):** _____ **Date:** _____

Sequence ID/ Work Center ID	Operation Description	Set Up/ Run Hours	Tool ID	Tool #	Plan Code	Accept Qty	Reject Qty	Reject Number	Insp. Stamp
130		0.00							
Crosstubes	Crosstubes								
Crosstubes	**Memo**	0.00							
	1-Drill Tube as per Dwg D350-748-141 Using DT8876 A,B &C Drill Jigs, Set-up drill table as per QSI 010								
	2-Deburr								
	3-Engrave Part # and Batch # as per Dwg D350-748-141								
	4-Remove all marks from tube within limits of D350-748-141 SAD 10-11-26								
	5- Apply a light coat of LPS3 on the interior of tube Batch:_____								
140	QC5- Inspect part completeness to step on W/O	0.00							
QC	**Memo**	0.00							
Quality Control	CHECK 10 DEG HOLES WITH DT8876E (EUROCOPTER CLAMP)								

DP 10-11-26

See Attached E-mail

S 10/12/13

P/O on First Page

outsource - NDT issue P/O: to acuren P/O: 13113 ck 10/12/09 (1)

Pack: ensure copy of NDT results rec'd attached to W/O

10/12/09 (1)

Dart Aerospace Ltd

W/O: 61764		WORK ORDER CHANGES					
DATE	STEP	PROCEDURE CHANGE	By	Date	Qty	Approval Chief Eng / Prod Mgr	Approval QC Inspector
10/12/09	175	NDT per QSI038 before + after lead test per eng. this time only P/O: 13113	CL	10/12/09	1	10-12-09	
		rec'd + inspect		10/12/09	0		

Part No: D350-748-101 PAR #: _____ Fault Category: _____ NCR: Yes No DQA: _____ Date: _____

Resolution: _____ Disposition: _____ QA: N/C Closed: _____ Date: _____

NCR:		WORK ORDER NON-CONFORMANCE (NCR)						
DATE	STEP	Description of NC Section A	Corrective Action Section B			Verification Section C	Approval Chief Eng	Approval QC Inspector
			Initial Chief Eng	Action Description Chief Eng	Sign & Date			

NOTE: Date & initial all entries

H:\fFORMS\Quality Assurance\approved QA\NCRWO RevE

Work Order ID 61764

Thursday, September 02, 2010 11:18:22 AM

Item ID: D350-748-101 **Accept** **Setup Start** **Stop**

Revision ID:

Item Name: Crosstube Installation, High Fwd

Start Date: 9/2/2010 **Start Qty:** 1.00 **Cust Item ID:**

Required Date: 9/20/2010 **Req'd Qty:** 1.00 **Customer:**

Reference:

Approvals: **Process Plan:** _____ **Date:** _____ **Tooling:** _____ **Date:** _____ **Run Start** **Stop**

QC: _____ **Date:** _____ **SPC (Y/N):** _____ **Date:** _____

Sequence ID/ Work Center ID	Operation Description	Set Up/ Run Hours	Tool ID	Tool #	Plan Code	Accept Qty	Reject Qty	Reject Number	Insp. Stamp
150	Outsource process-Cadplate per QSI017 4.1.9.1	0.00							
Outsource3						CZ	10/12/14	①	
Outsource process - Cad plate	**Memo**	0.00							
	Issue P/O: 13128 Stress relief at 375° for 5 hours Magnetic Particle Inspect per ASTM E1444 Cadium Plate per AMS-QQ-P-416B, Class 1, Type 2 Embrittle relief at 375° for 8 hours, Chromate Treat Possibe Supplier: Southwest United Industries Ensure Certificate of Conformity is attached								
160	Receive & Inspect for Damage & Mat'l Certs	0.00							
Packaging						11/01/14	①		
Packaging	**Memo**	0.00							
	Ensure certificate of conformity is attached								
170	QC5- Inspect part completeness to step on W/O	0.00							
QC						11/01/24			
Quality Control	**Memo**	0.00							

Span = 81.750"
twist = .051"

issue P/O: accept LPI per ASTM 1417 level 2 or LPI inspect as per QSI038 P/O: 13367 CZ 11/01/26 ①

11/01/26

rec'd + inspect + attached c of c to w/o

Dart Aerospace Ltd

W/O:		WORK ORDER CHANGES					
DATE	STEP	PROCEDURE CHANGE	By	Date	Qty	Approval Chief Eng / Prod Mgr	Approval QC Inspector

Part No: _____ **PAR #:** _____ **Fault Category:** _____ **NCR:** Yes No **DQA:** _____ **Date:** _____

Resolution: _____ **Disposition:** _____ **QA: N/C Closed:** _____ **Date:** _____

NCR:		WORK ORDER NON-CONFORMANCE (NCR)						
DATE	STEP	Description of NC Section A	Corrective Action Section B			Verification Section C	Approval Chief Eng	Approval QC Inspector
			Initial Chief Eng	Action Description Chief Eng	Sign & Date			

NOTE: Date & initial all entries

H:\fFORMS\Quality Assurance\approved QA\NCRWO RevE

Work Order ID 61764

Thursday, September 02, 2010 11:18:22 AM

Item ID: D350-748-101 **Accept** **Setup Start** **Stop**

Revision ID:

Item Name: Crosstube Installation, High Fwd

Start Date: 9/2/2010 **Start Qty:** 1.00 **Cust Item ID:**

Required Date: 9/20/2010 **Req'd Qty:** 1.00 **Customer:**

Reference:

Approvals: **Process Plan:** _____ **Date:** _____ **Tooling:** _____ **Date:** _____ **Run Start** **Stop**

QC: _____ **Date:** _____ **SPC (Y/N):** _____ **Date:** _____

Sequence ID/ Work Center ID	Operation Description	Set Up/ Run Hours	Tool ID	Tool #	Plan Code	Accept Qty	Reject Qty	Reject Number	Insp. Stamp
180	SprayPaint	0.00							
SprayPaint									
Spray Painting	**Memo**	0.00				ml	11	02	02 (1)
	1-Prime inside crosstube as per QSI 005 4.2 2-Prime Outside of Tube as per Dart QSI 005 4.2								
									Pto →
190	QC14- Inspect Spray Paint	0.00							
QC									
Quality Control	**Memo**	0.00							
	Then,Wrap in plastic bag to protect from scratches								
200	Crosstubes	0.00							
Crosstubes									
Crosstubes	**Memo**	0.00							
	1-Install Ground wire Insert,then insert screw and washer 2-Install Abraision strips as per Dwg D350-748-141 & QSI 035. 3-Install supports Using Dt8876 as per Dwg D350-748-141,Torque to 60-80 IN-LBS								

Dart Aerospace Ltd

W/O:		WORK ORDER CHANGES					
DATE	STEP	PROCEDURE CHANGE	By	Date	Qty	Approval Chief Eng / Prod Mgr	Approval QC Inspector

Part No: D350-748-101 PAR #: N/A Fault Category: Crossrube NCR: (Yes) No DQA: [illegible] Date: 11-03-01

Resolution: Scrap Disposition: Scrap QA: N/C Closed: [illegible] Date: 11/03/02

NCR: 61764		WORK ORDER NON-CONFORMANCE (NCR)						
DATE	STEP	Description of NC Section A	Corrective Action Section B: Initial Chief Eng	Action Description Chief Eng	Sign & Date	Verification Section C	Approval Chief Eng	Approval QC Inspector
11/02/02	# 180	Found After Paint that the tube had a Large Pit mark in it.	[illegible] 11/02/24 QS 0042	Grind mark out and blend as best as Posible as per E-mail From Chris P (11/02/04) Attached to last page.			[illegible] 11/02/24 QS 0042	
			[illegible] 11/02/24 QS 0042	SCRAP TUBE. ~~Residual~~ Likely from Residual scale, should be solved with new extrusion/process	BE 11/02/25	S 11/02/25	[illegible] 11/02/24 QS 0042	S 11/02/25

NOTE: Date & initial all entries

H:\fFORMS\Quality Assurance\approved QA\NCRWO RevE

Work Order ID 61764

Thursday, September 02, 2010 11:18:22 AM

Item ID: D350-748-101 **Accept** **Setup Start** **Stop**

Revision ID:

Item Name: Crosstube Installation, High Fwd

Start Date: 9/2/2010 **Start Qty:** 1.00 **Cust Item ID:**

Required Date: 9/20/2010 **Req'd Qty:** 1.00 **Customer:**

Reference:

Run Start **Stop**

Approvals: **Process Plan:** _____ **Date:** _____ **Tooling:** _____ **Date:** _____

QC: _____ **Date:** _____ **SPC (Y/N):** _____ **Date:** _____

Sequence ID/ Work Center ID	Operation Description	Set Up/ Run Hours	Tool ID	Tool #	Plan Code	Accept Qty	Reject Qty	Reject Number	Insp. Stamp
210	QC5- Inspect part completeness to step on W/O	0.00							
QC	**Memo**	0.00							
Quality Control									
220	Pick Kit	0.00							
Packaging	**Memo**	0.00							
Packaging									
230	QC4- 100% Inspect kits for completeness	0.00							
QC	**Memo**	0.00							
Quality Control									

Dart Aerospace Ltd

W/O:		WORK ORDER CHANGES					
DATE	STEP	PROCEDURE CHANGE	By	Date	Qty	Approval Chief Eng / Prod Mgr	Approval QC Inspector

Part No: _____ **PAR #:** _____ **Fault Category:** _____ **NCR:** Yes No **DQA:** _____ **Date:** _____

Resolution: _____ **Disposition:** _____ **QA: N/C Closed:** _____ **Date:** _____

NCR:		WORK ORDER NON-CONFORMANCE (NCR)						
DATE	STEP	Description of NC Section A	Corrective Action Section B			Verification Section C	Approval Chief Eng	Approval QC Inspector
			Initial Chief Eng	Action Description Chief Eng	Sign & Date			

NOTE: Date & initial all entries

H:\fFORMS\Quality Assurance\approved QA\NCRWO RevE

Work Order ID 61764

Thursday, September 02, 2010 11:18:22 AM

Item ID: D350-748-101 **Accept** **Setup Start** **Stop**

Revision ID:

Item Name: Crosstube Installation, High Fwd

Start Date: 9/2/2010 **Start Qty:** 1.00 **Cust Item ID:**

Required Date: 9/20/2010 **Req'd Qty:** 1.00 **Customer:**

Reference:

Run Start **Stop**

Approvals: **Process Plan:** _____ **Date:** _____ **Tooling:** _____ **Date:** _____

QC: _____ **Date:** _____ **SPC (Y/N):** _____ **Date:** _____

Sequence ID/ Work Center ID	Operation Description	Set Up/ Run Hours	Tool ID	Tool #	Plan Code	Accept Qty	Reject Qty	Reject Number	Insp. Stamp
240		0.00							
Packaging	Packaging								
Packaging	**Memo**	0.00							
Packaging	Identify and pack for shipping as per PPP D350-748-101 Location:_____ PPP Rev:_____								
250	QC21- Final Inspection - Work Order Release	0.00							
QC	**Memo**	0.00							
Quality Control									

MF
11-02-25

Dart Aerospace Ltd

W/O:		WORK ORDER CHANGES					
DATE	STEP	PROCEDURE CHANGE	By	Date	Qty	Approval Chief Eng / Prod Mgr	Approval QC Inspector

Part No: _____ PAR #: _____ Fault Category: _____ NCR: Yes No DQA: _____ Date: _____

Resolution: _____ Disposition: _____ QA: N/C Closed: _____ Date: _____

NCR:		WORK ORDER NON-CONFORMANCE (NCR)						
DATE	STEP	Description of NC Section A	Corrective Action Section B			Verification Section C	Approval Chief Eng	Approval QC Inspector
			Initial Chief Eng	Action Description Chief Eng	Sign & Date			

NOTE: Date & initial all entries

H:\fFORMS\Quality Assurance\approved QA\NCRWO RevE

Picklist Print

Thursday, September 02, 2010 11:18:26 AM

Work Order ID: 61764

Parent Item: D350-748-101

Parent Item Name: Crosstube Installation, High Fwd

Start Date: 9/2/2010 **Required Date:** 9/20/2010

Start Qty: 1.00 **Required Qty:** 1.00

Comments:
IPP Rev:A New Issue 06-07-05 JLM
IPP Rev:B Update qty of MS21042L5 06-09-12 KJ
IPP Rev:C Rev B 07-11-15 DD
IPP Rev D Combined manufacturing 08.04.02 EC verified by: DD
IPP Rev:E 08-06-24 revD as per dwg DD verified by:EC IPP Rev:F
10.08.04 added QSI010 4.3 DD verf:EC

Component Item ID/ Item Name	Replacement Item ID	Mfg/ Purch	Bin Item	Primary Location	Last Location	Route Seq ID	Unit of Measure	Qty on Hand	Qty per Kit	Total Qty	Qty Issued	Date Issued	Status
D350-748-141TRN		Manufactured	No	B61136		110	Each	0.0000	1	1	1	10-11-22	
Crosstube Turning Detail													
ALS4-1032-225		Purchased	No	made from D6017-115 B32512.		200	Each	5,336.000	1	1			
Insert													
				Location		**Loc Qty**		**Loc Code**					
				PK011		5336							
					110768	5336							
AN960JD10	NAS1149D0363J	Purchased	No			200	Each	6.0000	1	1			
Washer													
				Location		**Loc Qty**		**Loc Code**					
				ST		6							
					107715	6							
D2856-400		Manufactured	No			200	f	313.4060	1.181	1.243158			
Abraison Strip													
				Location		**Loc Qty**		**Loc Code**					
				ST403		313.4060421							
					56626	97.4060421							
					59920	216							

Dart Aerospace Ltd

W/O:		WORK ORDER CHANGES					
DATE	STEP	PROCEDURE CHANGE	By	Date	Qty	Approval Chief Eng / Prod Mgr	Approval QC Inspector

Part No: _____ PAR #: _____ Fault Category: _____ NCR: Yes No DQA: _____ Date: _____

Resolution: _____ Disposition: _____ QA: N/C Closed: _____ Date: _____

NCR:		WORK ORDER NON-CONFORMANCE (NCR)						
DATE	STEP	Description of NC Section A	Corrective Action Section B			Verification Section C	Approval Chief Eng	Approval QC Inspector
			Initial Chief Eng	Action Description Chief Eng	Sign & Date			

NOTE: Date & initial all entries

H:\fFORMS\Quality Assurance\approved QA\NCRWO RevE

Picklist Print

Thursday, September 02, 2010 11:18:26 AM

Work Order ID: 61764

Parent Item: D350-748-101

Parent Item Name: Crosstube Installation, High Fwd

Start Date: 9/2/2010 **Required Date:** 9/20/2010

Start Qty: 1.00 **Required Qty:** 1.00

D3502-1	Manufactured	No	200	Each	54.0000	2	2	
Support								

Location	Loc Qty	Loc Code
ST063	12	
61206	12	
ST066	42	
50287	38	
52903	4	

MS21920-20	Purchased	No	200	Each	77.0000	2	2	
Clamp (per MIL-DTL-8783C)								

Location	Loc Qty	Loc Code
LG	77	
112624	6	
114687	21	
114779	24	
115057	26	

MS27039-1-10	Purchased	No	200	Each	126.0000	1	1	
Screw								

Location	Loc Qty	Loc Code
ST291	126	
112794	26	
112940	100	

Dart Aerospace Ltd

W/O:		WORK ORDER CHANGES					
DATE	STEP	PROCEDURE CHANGE	By	Date	Qty	Approval Chief Eng / Prod Mgr	Approval QC Inspector

Part No: _____ **PAR #:** _____ **Fault Category:** _____ **NCR:** Yes No **DQA:** _____ **Date:** _____

Resolution: _____ **Disposition:** _____ **QA: N/C Closed:** _____ **Date:** _____

NCR:		WORK ORDER NON-CONFORMANCE (NCR)						
DATE	STEP	Description of NC Section A	Corrective Action Section B			Verification Section C	Approval Chief Eng	Approval QC Inspector
			Initial Chief Eng	Action Description Chief Eng	Sign & Date			

NOTE: Date & initial all entries

H:\fFORMS\Quality Assurance\approved QA\NCRWO RevE

Picklist Print

Thursday, September 02, 2010 11:18:26 AM

Work Order ID: 61764

Parent Item: D350-748-101

Parent Item Name: Crosstube Installation, High Fwd

Start Date: 9/2/2010 **Required Date:** 9/20/2010

Start Qty: 1.00 **Required Qty:** 1.00

AN4-41A Bolt	Purchased	No	220	Each	274.0000	8	8	

Location	Loc Qty	Loc Code
ST337	40	
ST360	234	
111424	4	
113359	30	
114941	100	
115108	100	

AN4-6A Bolt	Purchased	No	220	Each	1,418.000	16	16	

Location	Loc Qty	Loc Code
ST356	1418	
112933	96	
113149	19	
114523	2	
114615	1	
114941	500	
115108	300	
115457	500	

AN5-32A Bolt	Purchased	No	220	Each	196.0000	4	4	

Location	Loc Qty	Loc Code
ST340	196	
113121	4	
114056	42	
114405	50	
115016	50	
115108	50	

Dart Aerospace Ltd

W/O:		WORK ORDER CHANGES					
DATE	STEP	PROCEDURE CHANGE	By	Date	Qty	Approval Chief Eng / Prod Mgr	Approval QC Inspector

Part No: _____ **PAR #:** _____ **Fault Category:** _____ **NCR:** Yes No **DQA:** _____ **Date:** _____

Resolution: _____ **Disposition:** _____ **QA: N/C Closed:** _____ **Date:** _____

NCR:		WORK ORDER NON-CONFORMANCE (NCR)						
DATE	STEP	Description of NC Section A	Corrective Action Section B			Verification Section C	Approval Chief Eng	Approval QC Inspector
			Initial Chief Eng	Action Description Chief Eng	Sign & Date			

NOTE: Date & initial all entries

H:\fFORMS\Quality Assurance\approved QA\NCRWO RevE

Picklist Print

Thursday, September 02, 2010 11:18:26 AM

Work Order ID: 61764

Parent Item: D350-748-101

Parent Item Name: Crosstube Installation, High Fwd

Start Date: 9/2/2010 **Required Date:** 9/20/2010

Start Qty: 1.00 **Required Qty:** 1.00

AN960JD416	NAS1149D0463J	Purchased	No	220	Each	0.0000	32	32
Washer								
AN960JD516	NAS1149D0563J	Purchased	No	220	Each	34.0000	8	8
Washer								

Location	Loc Qty	Loc Code
ST	34	
103694	18	
107534	12	
109287	4	

D3500-1		Manufactured	No	220	Each	30.0000	4	4
Saddle								

Location	Loc Qty	Loc Code
ST424	30	
55605	2	
59422	16	
60489	12	

D3501-1		Manufactured	No	220	Each	394.0000	16	16
Bushing								

Location	Loc Qty	Loc Code
ST066	394	
45402	15	
45918	112	
48268	67	
53779	100	
61196	100	

Dart Aerospace Ltd

W/O:		WORK ORDER CHANGES					
DATE	STEP	PROCEDURE CHANGE	By	Date	Qty	Approval Chief Eng / Prod Mgr	Approval QC Inspector

Part No: _____ **PAR #:** _____ **Fault Category:** _____ **NCR:** Yes No **DQA:** _____ **Date:** _____

Resolution: _____ **Disposition:** _____ **QA: N/C Closed:** _____ **Date:** _____

NCR:		WORK ORDER NON-CONFORMANCE (NCR)						
DATE	STEP	Description of NC Section A	Corrective Action Section B			Verification Section C	Approval Chief Eng	Approval QC Inspector
			Initial Chief Eng	Action Description Chief Eng	Sign & Date			

NOTE: Date & initial all entries

H:\fFORMS\Quality Assurance\approved QA\NCRWO RevE

Picklist Print

Thursday, September 02, 2010 11:18:26 AM

Work Order ID: 61764

Parent Item: D350-748-101

Parent Item Name: Crosstube Installation, High Fwd

Start Date: 9/2/2010 **Required Date:** 9/20/2010

Start Qty: 1.00 **Required Qty:** 1.00

MS21042L4	Purchased	No	220	Each	2,379.000	24	24	
Nut								

Location		Loc Qty	Loc Code
ST300		2379	
	113422	68	
	114523	28	
	114718	16	
	114784	347	
	115108	1920	

MS21042L5	Purchased	No	220	Each	633.0000	4	4	
Nut								

Location		Loc Qty	Loc Code
ST139		133	
	114813	133	
ST300		500	
	115156	500	

Dart Aerospace Ltd

W/O:		WORK ORDER CHANGES					
DATE	STEP	PROCEDURE CHANGE	By	Date	Qty	Approval Chief Eng / Prod Mgr	Approval QC Inspector

Part No: _____ **PAR #:** _____ **Fault Category:** _____ **NCR:** Yes No **DQA:** _____ **Date:** _____

Resolution: _____ **Disposition:** _____ **QA: N/C Closed:** _____ **Date:** _____

NCR:		WORK ORDER NON-CONFORMANCE (NCR)						
DATE	STEP	Description of NC Section A	Corrective Action Section B			Verification Section C	Approval Chief Eng	Approval QC Inspector
			Initial Chief Eng	Action Description Chief Eng	Sign & Date			

NOTE: Date & initial all entries

H:\fFORMS\Quality Assurance\approved QA\NCRWO RevE

DART AEROSPACE LTD	Work Order:	41764
Description: Crosstube High Fwd (AS350/355)	Part Number:	D350-748-101
Inspection Dwg: D350-748-141 **Rev:** E		Page 1 of 1

For Step # 120

Required Dimension	Min	Max
Height	23.13	23.37
1/2 Span	40.78	41.02
Angle	75	77
Total Span	81.56	82.04

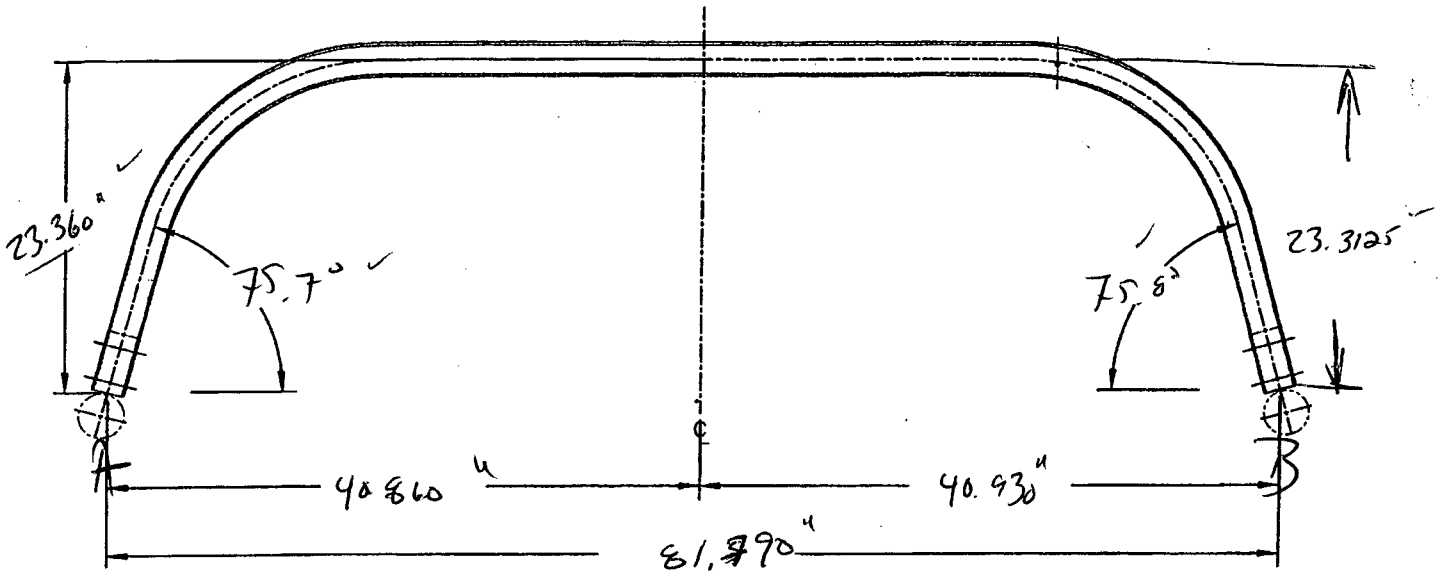

Comments
twist = .010" OK CP 10.11.22

QC15 Inspection	
Date	10/11/22

Rev	Date	Change	Revised by	Approved
A	07.02.06	New Issue	KJ/JM	
B	10.08.23	Dwg Rev updated	KJ	10.08.23

Dart Aerospace Ltd

W/O:		WORK ORDER CHANGES					
DATE	STEP	PROCEDURE CHANGE	By	Date	Qty	Approval Chief Eng / Prod Mgr	Approval QC Inspector

Part No: _____ **PAR #:** _____ **Fault Category:** _____ **NCR:** Yes No **DQA:** _____ **Date:** _____

Resolution: _____ **Disposition:** _____ **QA: N/C Closed:** _____ **Date:** _____

NCR:		WORK ORDER NON-CONFORMANCE (NCR)						
DATE	STEP	Description of NC Section A	Corrective Action Section B			Verification Section C	Approval Chief Eng	Approval QC Inspector
			Initial Chief Eng	Action Description Chief Eng	Sign & Date			

NOTE: Date & initial all entries

H:\FORMS\Quality Assurance\approved QA\NCRWO RevE

DART AEROSPACE LTD	Work Order:	
Description: Crosstube High Fwd (AS350/355)	**Part Number:**	**D350-748-101**
Inspection Dwg: D350-748-141 **Rev:** E		**Page 1 of 1**

For Skn #123

Required Dimension	Min	Max
Height	23.13	23.37
1/2 Span	40.78	41.02
Angle	75	77
Total Span	81.56	82.04

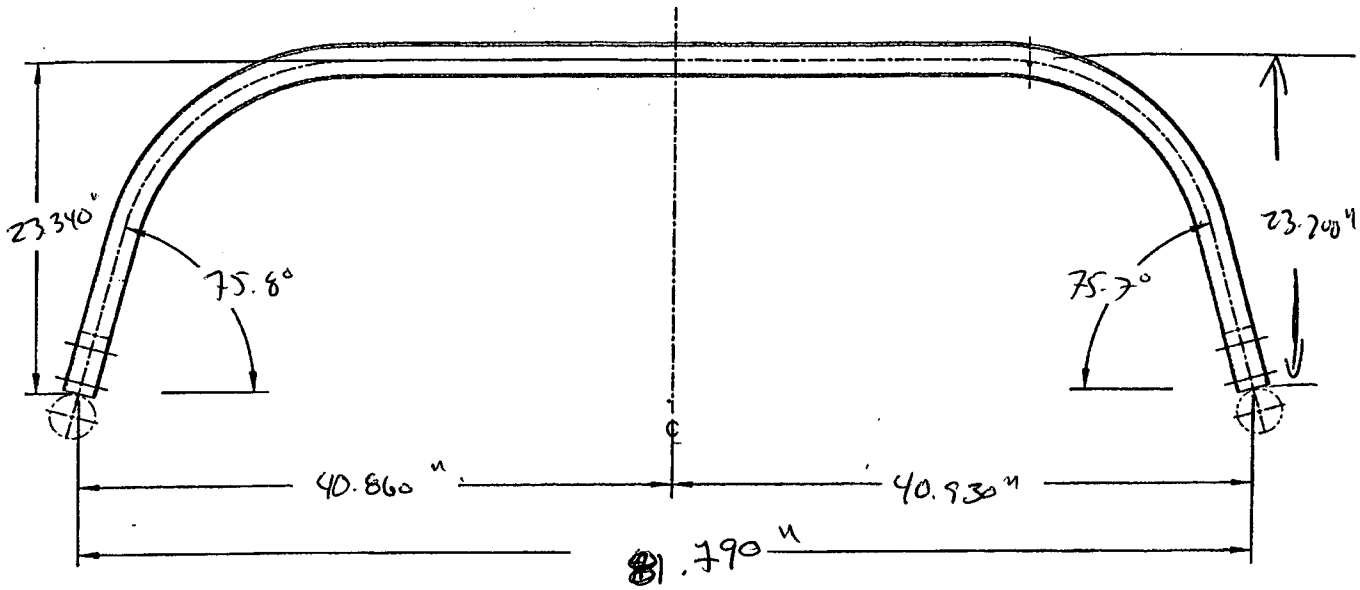

Comments
twist = ~~.814~~" .1015"
- measure after ~~tw~~ Stress Relief

QC15 Inspection	S
Date	10/4/24

Rev	Date	Change	Revised by	Approved
A	07.02.06	New Issue	KJ/JM	
B	10.08.23	Dwg Rev updated	KJ	2008-23

Item	Qty -141	Part Number	Description
1	X	D350-748-141	CROSSTUBE ASSEMBLY (AS 350/355 HI FWD)
2	1	D6017-115	CROSSTUBE
3	2	D3502-1	SUPPORT
4	2	D2856-400-710	ABRASION STRIP
5	1	AELS-1032-225	INSERT
6	1	NAS1149D0363J	WASHER (OR AN960JD10)
7	2	MS21920-20	CLAMP (PER DART SPEC. M-MS21920-20)
8	1	MS27039-1-10	SCREW

GENERAL NOTES:

1) MATERIAL: MANUFACTURED FROM D6017-115
   FINISHED LENGTH = 110.270±0.06
2) FINISH: MAGNETIC PARTICLE INSPECT PER DART QSI 038 4.2
   CADMIUM PLATE PER AMS-QQ-P-416B, CLASS 1, TYPE II
   PRIME INSIDE AND OUTSIDE PER DART QSI 005 4.2
   PAINT OUTSIDE PER DART QSI 005 4.2
3) TOLERANCES ARE PER DART QSI 018 UNLESS OTHERWISE NOTED.
4) UNITS: INCHES UNLESS OTHERWISE NOTED.
5) BREAK SHARP EDGES: 0.005 TO 0.010 MAX.
6) IDENTIFICATION: SCRIBE DART PART NUMBER "D350-748-141" AND BATCH NUMBER ON INSIDE OF CUFF USING VIBRATING STYLUS.
7) WEIGHT: 30.45 lbs
8) PART IS SYMMETRIC ABOUT CENTERLINE, EXCEPT FOR Ø0.297 HOLE.
9) BLEND OUT ALL EDGES FROM MACHINING LONGITUDINALY, TRANSITION SHOULD BE SMOOTH. NOTE: ALL HOLES ARE DRILLED AFTER BENDING.
10) BEND PROGRESSIVELY WITH A MINIMUM OF 7 PASSES. MAXIMUM TUBE FLATTENING DUE TO BENDING IS 6% BASED ON O.D.
11) HEAT TREAT TO MIN. 180 KSI PER MIL-T-6736 OR AMS 2759-1C AFTER TURNING.
12) INSTALL D2856-400-710 ABRASION STRIPS WITH A GAP ON BOTTOM SIDE OF CROSSTUBE, CENTERED OPPOSITE D3502-1 SUPPORT, PER QSI 035.
13) EXTREME CARE MUST BE TAKEN TO PROTECT THE OUTSIDE SURFACE OF THE TUBE. THE OUTSIDE SURFACE MUST BE SMOOTH AND FREE FROM SURFACE DEFECTS SUCH AS SCRATCHES, NICKS, OR DENTS. DEFECTS UP TO 0.005" MAY BE BLENDED OUT LONGITUDINALLY. CIRCUMFERENTIAL GRIND MARKS ARE UNACCEPTABLE. WHEN DRILLING HOLES EXTREME CARE MUST BE TAKEN AND CAREFUL DEBURRING PERFORMED TO ENSURE A CLEAN HOLE WITH NO CRACKING/CHIPPING/GROOVES.
14) TORQUE CLAMPS 60 TO 80 IN-LB. ENSURE AT LEAST 1.5 THREADS SHOWING IN SAFETY AND THAT NUT HAS NOT BOTTOMED-OUT AFTER TORQUING.

SHOP COPY
RETURN TO
ENGINEERING
UNCONTROLLED COPY
SUBJECT TO AMENDMENT
WITHOUT NOTICE
WORK ORDER
NO. 61764
BS10-902

RELEASED
2009 -10- 29

REV.	DESCRIPTION	BY	DATE
E	REVISE GENERAL NOTES; UPDATE TO CURRENT ADD STANDARDS; RELOCATED FLAG #6 PER PAR 08-046 (ZN A6-3); TOLERANCES (ZN C6-3, D1-3)	RF	09.09.30
D	MAG. PARTICLE AND CAD PLATE AS MFD.	CP	06.10.31
C	ADD CAD PLATING	CP	06.08.14
B	ADD D6017-115 & PRIME AND PAINT	CP	06.06.30
A	NEW ISSUE	CP	06.03.31

DESIGN		DART AEROSPACE LTD	
DRAWN	RF	HAWKESBURY, ONTARIO, CANADA	
CHECKED		DRAWING NO.	REV. E
MFG. APPR.		D350-748-141	SHEET 1 OF 4
APPROVED		TITLE	SCALE
DE APPR.		CROSSTUBE (AS 350/355 HI FWD)	NTS
DATE	09.09.30		

COPYRIGHT © 2006 BY DART AEROSPACE LTD
THIS DOCUMENT IS PRIVATE AND CONFIDENTIAL AND IS SUPPLIED ON THE EXPRESS CONDITION THAT IT IS NOT TO BE USED FOR ANY PURPOSE OR COPIED OR COMMUNICATED TO ANY OTHER PERSON WITHOUT WRITTEN PERMISSION FROM DART AEROSPACE LTD.

Dart Aerospace Ltd

W/O:		WORK ORDER CHANGES					
DATE	STEP	PROCEDURE CHANGE	By	Date	Qty	Approval Chief Eng / Prod Mgr	Approval QC Inspector

Part No: _____ PAR #: _____ Fault Category: _____ NCR: Yes No DQA: _____ Date: _____

Resolution: _____ Disposition: _____ QA: N/C Closed: _____ Date: _____

NCR:		WORK ORDER NON-CONFORMANCE (NCR)						
DATE	STEP	Description of NC Section A	Corrective Action Section B			Verification Section C	Approval Chief Eng	Approval QC Inspector
			Initial Chief Eng	Action Description Chief Eng	Sign & Date			

NOTE: Date & initial all entries

H:\fFORMS\Quality Assurance\approved QA\NCRWO RevE

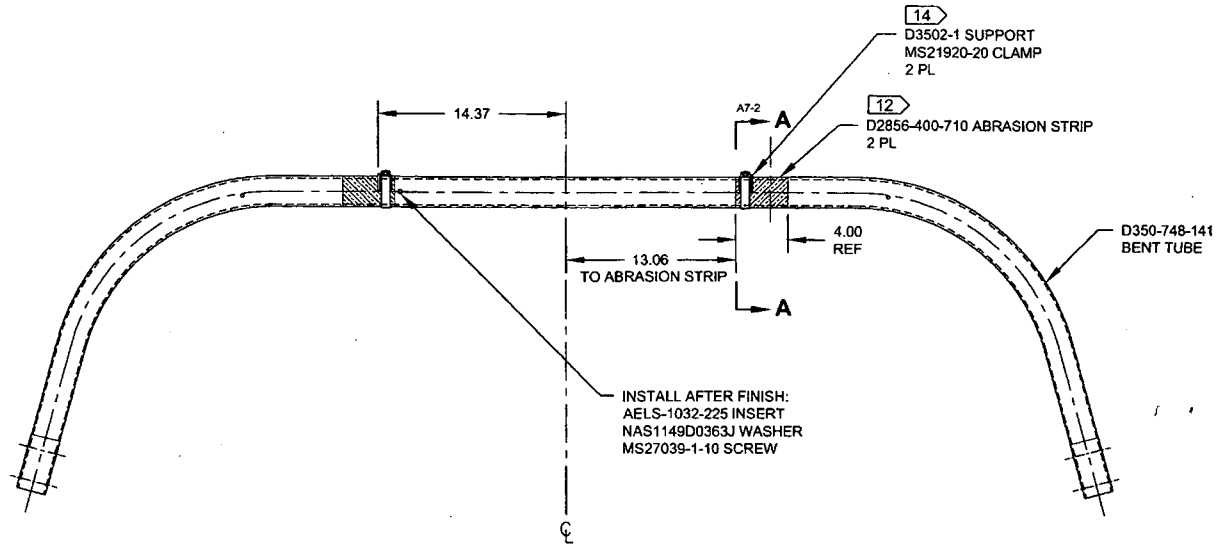

D350-748-141
ASSEMBLY DETAIL

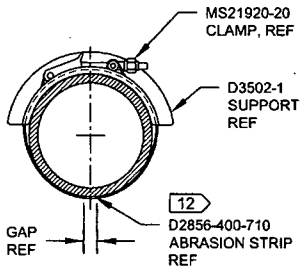

SECTION A-A D4-2
SCALE 4X

RELEASED
2009 -10- 29

w/o 41764

DESIGN		DART AEROSPACE LTD HAWKESBURY, ONTARIO, CANADA
DRAWN	RF	
CHECKED		DRAWING NO. REV. E
MFG. APPR.		D350-748-141 SHEET 2 OF 4
APPROVED		TITLE SCALE
DE APPR.		CROSSTUBE (AS 350/355 HI FWD) NTS
DATE	09.09.30	

COPYRIGHT © 2006 BY DART AEROSPACE LTD
THIS DOCUMENT IS PRIVATE AND CONFIDENTIAL AND IS SUPPLIED ON THE EXPRESS CONDITION THAT IT IS NOT TO BE USED FOR ANY PURPOSE OR COPIED OR COMMUNICATED TO ANY OTHER PERSON WITHOUT WRITTEN PERMISSION FROM DART AEROSPACE LTD.

Dart Aerospace Ltd

W/O:		WORK ORDER CHANGES					
DATE	STEP	PROCEDURE CHANGE	By	Date	Qty	Approval Chief Eng / Prod Mgr	Approval QC Inspector

Part No: _____ **PAR #:** _____ **Fault Category:** _____ **NCR:** Yes No **DQA:** _____ **Date:** _____

Resolution: _____ **Disposition:** _____ **QA: N/C Closed:** _____ **Date:** _____

NCR:		WORK ORDER NON-CONFORMANCE (NCR)						
DATE	STEP	Description of NC Section A	Corrective Action Section B			Verification Section C	Approval Chief Eng	Approval QC Inspector
			Initial Chief Eng	Action Description Chief Eng	Sign & Date			

NOTE: Date & initial all entries

H:\fFORMS\Quality Assurance\approved QA\NCRWO RevE

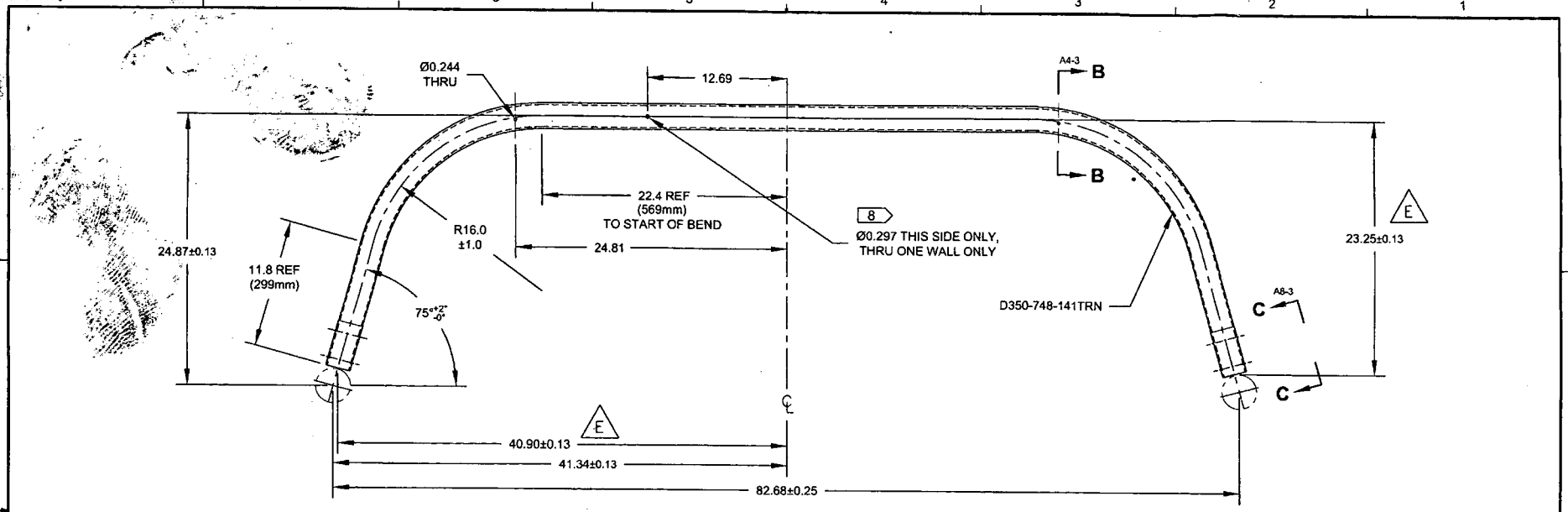

D350-748-141
BENDING AND DRILLING DETAIL 10

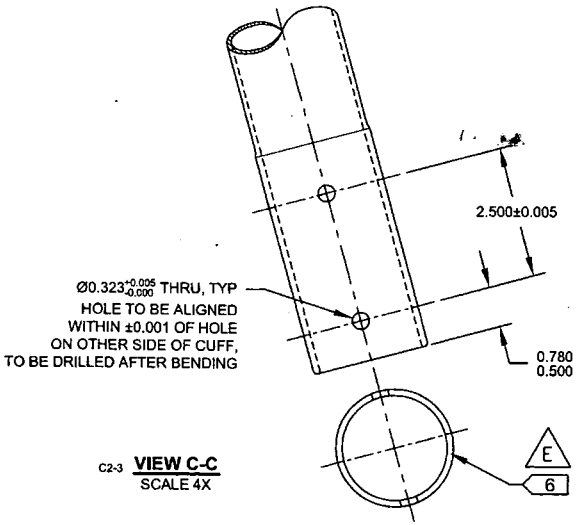

C2-3 **VIEW C-C**
SCALE 4X

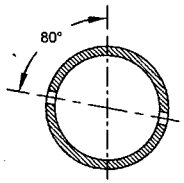

SECTION B-B D3-3
SCALE 4X

RELEASED
2009 -10- 29

w/o 41764

DESIGN		**DART AEROSPACE LTD**
DRAWN	RF	HAWKESBURY, ONTARIO, CANADA
CHECKED		DRAWING NO. REV. E
MFG. APPR.		D350-748-141 SHEET 3 OF 4
APPROVED		TITLE SCALE
DE APPR.		CROSSTUBE (AS 350/355 HI FWD) NTS
DATE	09.09.30	

COPYRIGHT © 2005 BY DART AEROSPACE LTD
THIS DOCUMENT IS PRIVATE AND CONFIDENTIAL AND IS SUPPLIED ON THE EXPRESS CONDITION THAT IT IS NOT TO BE USED FOR ANY PURPOSE OR COPIED OR COMMUNICATED TO ANY OTHER PERSON WITHOUT WRITTEN PERMISSION FROM DART AEROSPACE LTD.

Dart Aerospace Ltd

W/O:		WORK ORDER CHANGES					
DATE	STEP	PROCEDURE CHANGE	By	Date	Qty	Approval Chief Eng / Prod Mgr	Approval QC Inspector

Part No: _____ **PAR #:** _____ **Fault Category:** _____ **NCR:** Yes No **DQA:** _____ **Date:** _____

Resolution: _____ **Disposition:** _____ **QA: N/C Closed:** _____ **Date:** _____

NCR:		WORK ORDER NON-CONFORMANCE (NCR)						
DATE	STEP	Description of NC Section A	Corrective Action Section B			Verification Section C	Approval Chief Eng	Approval QC Inspector
			Initial Chief Eng	Action Description Chief Eng	Sign & Date			

NOTE: Date & initial all entries

H:\fFORMS\Quality Assurance\approved QA\NCRWO RevE

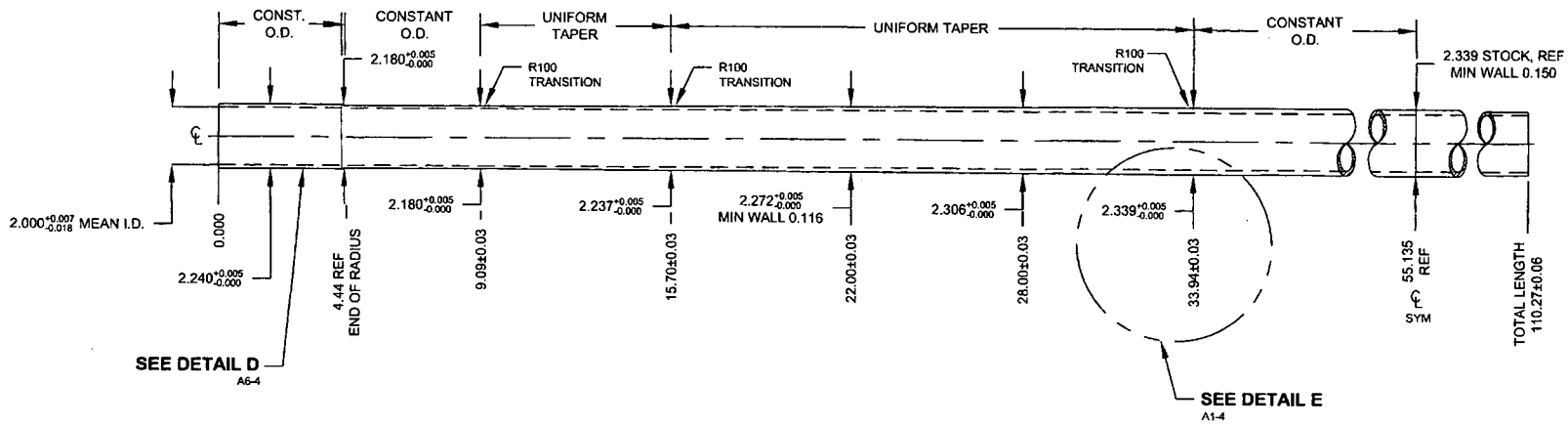

D350-748-141TRN
TURNING DETAIL

wo 41264

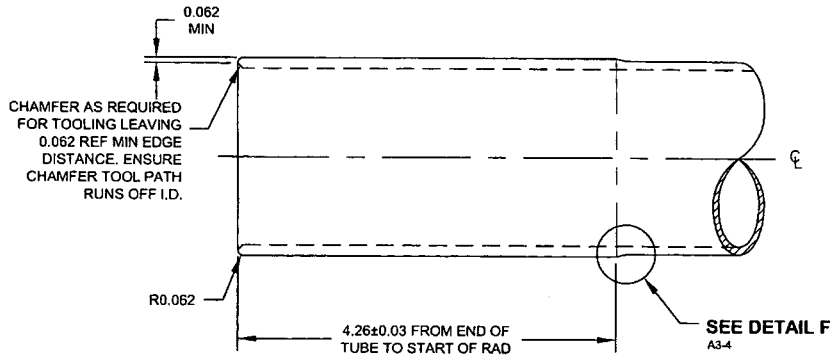

DETAIL D:
CROSSTUBE CUFF C7-4
SCALE 3X

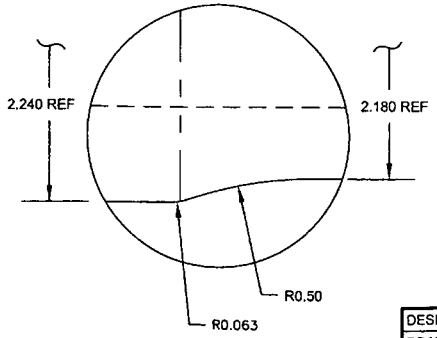

DETAIL F:
CUFF TRANSITION A5-4
NOT TO SCALE

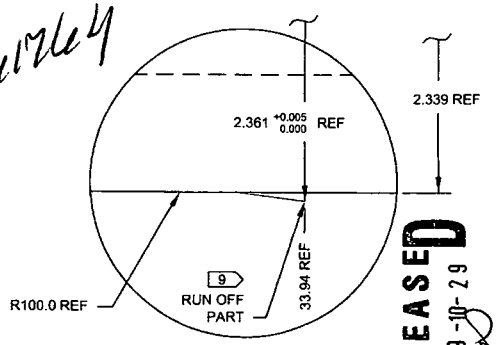

DETAIL E:
TAPER RUN-OFF C3-4
NOT TO SCALE

RELEASED
2009-10-29

DESIGN		**DART AEROSPACE LTD** HAWKESBURY, ONTARIO, CANADA
DRAWN	RF	
CHECKED		DRAWING NO. D350-748-141 — REV. E — SHEET 4 OF 4
MFG. APPR.		
APPROVED		TITLE: CROSSTUBE (AS 350/355 HI FWD) — SCALE: NTS
DE APPR.		
DATE	09.09.30	

COPYRIGHT © 2006 BY DART AEROSPACE LTD
THIS DOCUMENT IS PRIVATE AND CONFIDENTIAL AND IS SUPPLIED ON THE EXPRESS CONDITION THAT IT IS NOT TO BE USED FOR ANY PURPOSE OR COPIED OR COMMUNICATED TO ANY OTHER PERSON WITHOUT WRITTEN PERMISSION FROM DART AEROSPACE LTD.

Dart Aerospace Ltd

W/O:		WORK ORDER CHANGES					
DATE	STEP	PROCEDURE CHANGE	By	Date	Qty	Approval Chief Eng / Prod Mgr	Approval QC Inspector

Part No: _____ **PAR #:** _____ **Fault Category:** _____ **NCR:** Yes No **DQA:** _____ **Date:** _____

Resolution: _____ **Disposition:** _____ **QA: N/C Closed:** _____ **Date:** _____

NCR:		WORK ORDER NON-CONFORMANCE (NCR)						
DATE	STEP	Description of NC Section A	Corrective Action Section B			Verification Section C	Approval Chief Eng	Approval QC Inspector
			Initial Chief Eng	Action Description Chief Eng	Sign & Date			

NOTE: Date & initial all entries

H:\fFORMS\Quality Assurance\approved QA\NCRWO RevE

L Lacelle

From: David Shepherd [dshepherd@dartaero.com]
Sent: May 11, 2010 12:37 PM
To: 'L Lacelle'; 'Mike Petsche'
Cc: 'Bill Beckett'; 'Chris Provencal'; 'Dan Stow'; ssheldon@dartaero.com; 'Chantal Lavoie'
Subject: RE: 350 crosstubes

Linda,

As discussed, if the tubes have been structurally tested, it has been documented on the work orders, and Chris has signed off on them, then it is acceptable to me to release the parts.

David

From: L Lacelle [mailto:llacelle@dartaero.com]
Sent: Tuesday, May 11, 2010 8:37 AM
To: 'David Shepherd'; 'Mike Petsche'
Cc: 'Bill Beckett'; 'Chris Provencal'; 'Dan Stow'; ssheldon@dartaero.com; 'Chantal Lavoie'
Subject: RE: 350 crosstubes

Now that testing is done, can we ship out the batch that as been ready to heat treat?

LL

From: David Shepherd [mailto:dshepherd@dartaero.com]
Sent: April 27, 2010 3:40 PM
To: 'Mike Petsche'
Cc: 'Bill Beckett'; 'L Lacelle'; 'Chris Provencal'; 'Dan Stow'; ssheldon@dartaero.com
Subject: 350 crosstubes

Mike,

I discussed the 350 crosstube load testing with Bill a little while ago and this plan makes sense to him.

So, my recommendation to clear these crosstubes is to load the fwd crosstubes to 3500 lb and the aft crosstubes to 3000 lb in the deflection test rig and document on the work orders that this test has been completed. Hold max load for 1 minute. Per TP-D350-748-2, these loads represent the maximum load on these crosstubes at gross weight and are below the yield point of the material. I would like to request that Chris Provencal witness these tests and sign off the work orders based on his experience with Dart landing gears. My feeling is that if there is a problem with the parts, it will manifest itself during this load test. I, for one, would feel a lot more confident in testing each crosstube in this manner than relying totally on what Exova has to say. I think it would be very difficult to reach a conclusion on the whole batch on the basis of cracks in two parts from the batch.

I believe that we can accomplish this before next Friday, which also gives us time to hear what Exova has to say in case it has an impact on our decision. So far, what I have seen from Exova shows me that there are fluctuations in the heat treating but the tubes are heat treated to our specification.

For this reason, I believe we should tell DHS that it looks like we will be able to start shipping 350 crosstubes by May 7th pending a successful Engineering test of the material.

David.

No virus found in this incoming message.
Checked by AVG - www.avg.com
Version: 8.5.437 / Virus Database: 271.1.1/2865 - Release Date: 05/11/10 06:26:00

ACUREN

P- 05492

LIQUID PENETRANT TEST REPORT

PAGE 1 OF 1

CLIENT: DART AEROSPACE
ATTENTION: LINDA LACELLE / MAINTENANCE
ADDRESS: 1270, HIBER DEN / HALIFAX BAY, ON
DATE: Dec 19/2010
TIME: AM ☑ PM ☐
ACUREN JOB NO.: 183-10-0957
PO/WO NO.:
WORK LOCATION: AS ADDRESS
ACCEPTANCE STD.: ASTM 1417 / CSI 03 REV./DATE: 2005
PROJECT: LIQUID PENETRANT INSPECTION ON "CROSSTUBE" - AIRCRAFT
ITEM(S) EXAMINED: SEE W.O. # IN RESULTS

JOB DESCRIPTION | PROCEDURE NO. LT-003 REV./DATE 2003 | TECHNIQUE NO. LT-003 REV./DATE 2003

PART NO.: MATERIAL: 4130 THICKNESS: N/A

SCOPE: PERFORMED A WET FLO INSPECTION BY LIQUID PENETRANT ON 100% OF THE EXTERNAL SURFACE

TEST DETAILS

METHOD: ☑ FLUORESCENT ☐ VISIBLE
FAMILY BRAND: MAGNAFLUX
PENETRANT: ZL-67 — MINIMUM DWELL TIME 10 MIN.
PENETRANT REMOVER: H_2O — MINIMUM DRY TIME >10 MIN.
DEVELOPER: SKD-S2 — MINIMUM DWELL TIME 10 MIN.
DEVELOPER TYPE: ☑ NON AQUEOUS ☐ AQUEOUS ☐ DRY

☑ WATER WASH ☐ SOLVENT REMOVABLE ☐ POST EMULSIFIED
BLACK LIGHT S/N: 13740 ☑ OUTPUT > 1000 µW/CM² ☑ AMBIENT < 2 fc
LIGHTING EQUIP. ☑ FLASHLIGHT ☑ TROUBLELIGHT ☑ OUTPUT>100 fc @ SURFACE
OTHER:
LIGHT METER S/N: CAL DUE DATE: FEB 05-2011

TEST SURFACE

SURFACE CONDITION: ☐ AS GROUND ☐ AS WELDED ☐ MACHINED ☐ SHOT BLASTED ☑ CLEAN BARE METAL
SURFACE TEMPERATURE: ☐ < - 4°C/ 20°F ☐ - 4°C/ 20°F TO 10°C/50°F ☑ 10°C/50°F TO 52°C/125°F ☐ > 52°C/125°F

RESULTS- (☐ METRIC ☑ IMPERIAL)

#	ITEMS			ACC.	REJ.
#1	#1	CROSSTUBE - W.O. ID	63746	✓	✓
2	2		63747	✓	✓
3	3		63748	✓	✓
4	4		63749	✓	✓
5	5		61763	✓	✓
6	6		61764	✓	✓
7	7		61765	✓	✓
8	8		61766	✓	✓
B	A	← SEE NOTE →		B	A
ITEMS				ACC.	REJ.
5X "MOUNTS" - W.O. ID			61890	✓	

NOTE: B = BEFORE DEFLECTION TEST
A = AFTER DEFLECTION TEST

ITEM ID: D350-748-201 (ITEMS # 1, 2, 3, 4)
ITEM ID: D350-748-101 (ITEMS # 5, 6, 7, 8)
ITEM ID: D3637-3 (MOUNTS)

Scope of Services
The agreement of Acuren Group Inc. to perform services extends only to those services provided for in writing. Under no circumstances shall such services extend beyond the performance of the requested services. It is expressly understood that all descriptions, comments and expressions of opinion reflect the opinions or observations of Acuren Group Inc. based on information and assumptions supplied by the owner/operator and are not intended nor can they be construed as representations or warranties. Acuren Group Inc. is not assuming any responsibilities of the owner/operator and the owner/operator retains complete responsibility for the engineering, manufacture, repair and use decisions as a result of the data or other information provided by Acuren Group Inc. In no event shall Acuren Group Inc.'s liability in respect of the services referred to herein exceed the amount paid for such services.
Standard of Care
In performing the services provided, Acuren Group Inc. uses the degree, care and skill ordinarily exercised under similar circumstances by others performing such services in the same or similar locality. No other warranty, expressed or implied, is made or intended by Acuren Group Inc.

SIGNATURES

CLIENT REPRESENTATIVE: Ian Tilley (PRINT) — SIGNATURE
TECHNICIAN (SIGNATURE):
NAME (PRINT): Wes Desko
1st TECHNICIAN — CGSB LEVEL 3 SNT LEVEL 2 CGSB REG. NO 3049
2nd TECHNICIAN — CGSB LEVEL — SNT LEVEL — CGSB REG. NO —

DTR # E63104
REPORT REVIEWED BY: NAME INITIALS

WHITE – CLIENT COPY CANARY – OFFICE COPY PINK – TECHNICIAN COPY GOLD – OFFICE COPY

PT Sept 2005

DART AEROSPACE LTD	Work Order:	61769
Description: Crosstube High Fwd (AS350/355)	Part Number:	D350-748-101
Inspection Dwg: D350-748-141 **Rev:** E		Page 1 of 1

Required Dimension	Min	Max
Height	23.13	23.37
1/2 Span	40.78	41.02
Angle	75	77
Total Span	81.56	82.04

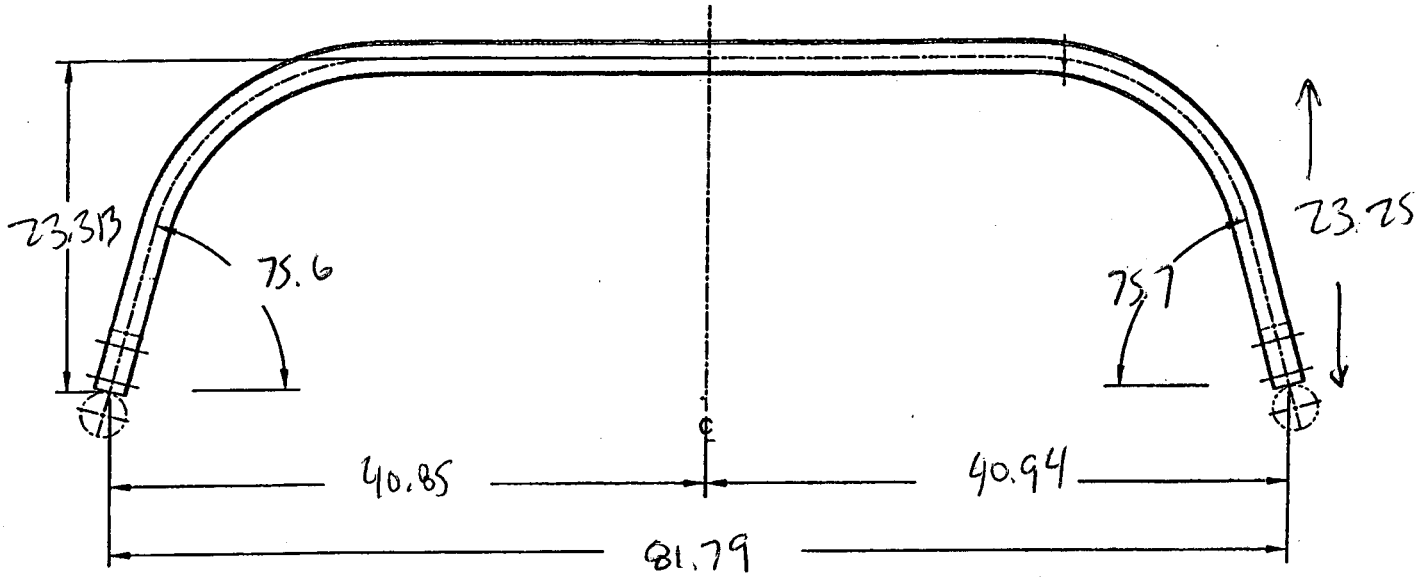

Comments
FOLLOWING DEFLECTION TEST
ACCEPTABLE 10.12.09

QC15 Inspection	
Date	10.12.09

Rev	Date	Change	Revised by	Approved
A	07.02.06	New Issue	KJ/JM	
B	10.08.23	Dwg Rev updated	KJ	10.08.23

CERTIFICATE OF CONFORMANCE

CADORATH PLATING CO. LTD.
2150 LOGAN AVENUE
WINNIPEG, MANITOBA R2J-0J1

DATE: Jan-14-2011

CONSIGNED TO: Dart Aerospace Ltd.
1270 Aberdeen St.
Hawksbury, ON K6A 1K7

W/O #: 100752

INVOICE #: 52907

CONTRACT OR PURCHASE ORDER # PO13128

DESCRIPTION: SKID

QTY 1

P/N # d350-748-101

S/N # B61764

STRESS RELIEF BAKE @375 DEG. BAKE HEAT CHART #10-1335. MPI INSPECTED IAW ASTM-E-1444. CADMIUM PLATED IAW AMS-QQ-P-416C, TYPE 2 YELLOW, CLASS 1. BAKE HEAT CHART #11-5.

8 u/01/24

CERTIFICATE: I certify that the items indicated here on have been inspected and tested and conform to all specifications and requirements detailed on the contract or purchase order.

Approved Inspector: CP 2

ACUREN

LIQUID PENETRANT TEST REPORT

P- 05496

PAGE 1 OF 2

CLIENT: DART AEROSPACE
ATTENTION: LINDA LACELLE / CHANTALE / IAN
ADDRESS: 1270, ABERDEN ST. HAWKESBURY, ON

DATE: JAN/26/2011 TIME: AM ☑ PM ☐
ACUREN JOB NO.: 188-11-
PO/WO NO.:
WORK LOCATION: AS ADDRESS
ACCEPTANCE STD.: ASTM1417/ASE-038 REV./DATE: 2005

PROJECT: WET FLUO PENETRANT INSPECTION ON 14 "CROSSTUBES"; 4 "COLLECTIVE BELLCRANK"

ITEM(S) EXAMINED: SEE BELOW

JOB DESCRIPTION | PROCEDURE NO. LT-002 REV./DATE 2008 | TECHNIQUE NO. LT-002 REV./DATE 2008

PART NO.: | MATERIAL: ALODINE ALUMINUM | THICKNESS: N/A

SCOPE: PERFORMED A WET FLUORESCENT LIQUIDE PENETRANT INSPECTION ON 100% OF THE EXTERNAL SURFACE

TEST DETAILS

METHOD	☑ FLUORESCENT ☐ VISIBLE		
FAMILY BRAND	MAGNAFLUX		
PENETRANT	ZL-67	MINIMUM DWELL TIME	10 MIN.
PENETRANT REMOVER	H_2O	MINIMUM DRY TIME	>10 MIN.
DEVELOPER	SKD-S2	MINIMUM DWELL TIME	10 MIN.
DEVELOPER TYPE	☑ NON AQUEOUS ☐ AQUEOUS ☐ DRY		

☑ WATER WASH ☐ SOLVENT REMOVABLE ☐ POST EMULSIFIED
BLACK LIGHT S/N 13798 ☑ OUTPUT > 1000 µ W/CM² ☑ AMBIENT < 2 fc
LIGHTING EQUIP. ☐ FLASHLIGHT ☐ TROUBLELIGHT ☐ OUTPUT>100 fc @ SURFACE
OTHER
LIGHT METER S/N — CAL DUE DATE FEB/05/2011

TEST SURFACE

SURFACE CONDITION: ☐ AS GROUND ☐ AS WELDED ☐ MACHINED ☐ SHOT BLASTED ☑ CLEAN BARE METAL
SURFACE TEMPERATURE: ☐ < - 4°C/ 20°F ☐ - 4°C/ 20°F TO 10°C/50°F ☑ 10°C/50°F TO 52°C/125°F ☐ > 52°C/125°F

RESULTS- (☐ METRIC ☑ IMPERIAL)

		ACCEPT	REJECT	
1	4X "COLLECTIVE BELLCRANK	✓		→ WO ID 64913 → ITEM ID:- D212-705-1-007
2	CROSS-TUBE W.O. ID 63591	✓		→ ITEM ID:- D350-748-101 (H.F.)
3	CROSS-TUBE W.O. ID 63592	✓		→ ITEM ID:- D350-748-101 (H.F.)
4	CROSS-TUBE W.O. ID 63746	✓		→ ITEM ID:- D350-748-201 (H.A.)
5	CROSS-TUBE W.O. ID 63747	✓		→ ITEM ID:- D350-748-201 (H.A.)
6	CROSS-TUBE W.O. ID 63748	✓		→ ITEM ID:- D350-748-201 (H.A.)
7	CROSS-TUBE W.O. ID 63749	✓		→ ITEM ID:- D350-748-201 (H.A.)

SEE PAGE 2 OF 2

2011/01/26

Scope of Services
The agreement of Acuren Group Inc. to perform services extends only to those services provided for in writing. Under no circumstances shall such services extend beyond the performance of the requested services. It is expressly understood that all descriptions, comments and expressions of opinion reflect the opinions or observations of Acuren Group Inc. based on information and assumptions supplied by the owner/operator and are not intended nor can they be construed as representations or warranties. Acuren Group Inc. is not assuming any responsibilities of the owner/operator and the owner/operator retains complete responsibility for the engineering, manufacture, repair and use decisions as a result of the data or other information provided by Acuren Group Inc. In no event shall Acuren Group Inc.'s liability in respect of the services referred to herein exceed the amount paid for such services.
Standard of Care
In performing the services provided, Acuren Group Inc. uses the degree, care and skill ordinarily exercised under similar circumstances by others performing such services in the same or similar locality. No other warranty, expressed or implied, is made or intended by Acuren Group Inc.

SIGNATURES

CLIENT REPRESENTATIVE: Ian Titley (PRINT) — SIGNATURE
TECHNICIAN (SIGNATURE):
NAME (PRINT): YVES DESROSIERS
1ST TECHNICIAN — CGSB LEVEL 2 SNT LEVEL 2 CGSB REG. NO 3049
2ND TECHNICIAN — CGSB LEVEL — SNT LEVEL — CGSB REG. NO —

DTR # E63121
REPORT REVIEWED BY: NAME INITIALS

WHITE – CLIENT COPY CANARY – OFFICE COPY PINK – TECHNICIAN COPY GOLD – OFFICE COPY

ACUREN

RAPPORT#

RAPPORT D'INSPECTION NON DESTRUCTIVE

(SUITE) REPORT # P-05496 PAGE 2 DE 2

CLIENT: DART AEROSPACE DATE: JAN/26/2011 HEURE: ☑ AM ☐ PM

ATTENTION: LINDA LACELLE / CHANTALE / IAN ACUREN W/O : 188-11-02103

RÉSULTATS (☐ MÉTRIQUE ☑ IMPÉRIALE)

ITEM	COMMENTS	ACCEPT	REJET	ITEM ID
8	CROSS TUBE W.O. ID 61763	✓		ITEM ID: D350-748-101(H.F.)
9	CROSS TUBE W.O. ID 61764	✓		D350-748-101(H.F.)
10	CROSS TUBE W.O. ID 61765	✓		D350-748-101(H.F.)
11	CROSS TUBE W.O. ID 61766	✓		D-350-748-101(H.F.)
12	CROSS TUBE W.O. ID 61767	✓		D350-748-201(H.A.)
13	CROSS TUBE W.O. ID 61768	✓		D350-748-201(H.A.)
14	CROSS TUBE W.O. ID 61769	✓		D350-748-201(H.A.)
15	CROSS TUBE W.O. ID 61770	✓		D350-748-201(H.A.)

- NO REJECTABLE INDICATION WAS DETECTED, AS PER APPLICABLE STANDARD

Étendue des services

L'entente selon laquelle le Groupe Acuren Inc. Exécute les services ne concerne que les énoncés par écrit. En aucune circonstance ces services ne s'étendent au-delà de l'exécution des services demandés. Il est entendu que toutes les descriptions, les observations et les expressions d'opinions faites par Acuren reflètent les opinions ou les observations de l'entreprise fondées sur l'information et les hypothèses fournies par le propriétaire/opérateur, et elles ne constituent pas des déclarations ou des garanties ou ne peuvent être interprétées comme constituant. Le groupe Acuren Inc. N'assume aucune des responsabilités du propriétaire/opérateur, et le propriétaire/opérateur conserve la responsabilité entière des décisions prises en matière d'ingénierie, de fabrication, de réparation et d'usage à partir de l'information ou des données fournies par Acuren en rapport avec les services décrits dans les présentes ne peuvent excéder le coût des services rendus.

Norme de Diligence

Dans l'exécution des services, le Groupe Acuren inc. Applique le degré de diligence, le soin et la compétence normalement exercés dans des circonstances semblables par d'autres fournisseurs de ce type de services opérant dans la même localité ou dans une localité similaire. Aucune autre garantie, implicite ou explicite, n'est faite ou voulue par le Groupe Acuren Inc.

SIGNATURES

REPRÉSENTANT CLIENT: Dan Tilley (MOULÉ) — (SIGNATURE)

TECHNICIEN (SIGNATURE):

NOM (MOULIÉ): YVES DESROSIERS

1er TECHNICIEN — 2ème TECHNICIEN

ONGC NIVEAU 2 SNT NIVEAU 2 — ONGC NIVEAU — SNT NIVEAU —

ONGC N° REGISTRATION 3049 — ONGC N° REGISTRATION —

FTJ#: E63121

RAPPORT RÉVISÉ PAR: NOM INITIALES

LFD-10001

BLANCHE - COPIE DU CLIENT JAUNE - COPIE DU BUREAU ROSE - COPIE DU TECHNICIEN OR - COPIE DU BUREAU

UT Décembre 2005

Jason Murdoch

From: Chris Provencal <cprovencal@dartaero.com>
Sent: Thursday, February 24, 2011 8:57 AM
To: 'Jason Murdoch'; 'Mike Petsche'
Cc: 'Linda lacelle'; edowning@dartaero.com
Subject: RE: D350-748-101 w/o 61764 x-tube pitt

I told Dan P to grind the pit out, blending as best he can, and we'll make a disposition as to whether we can accept or scrap it. I think it will most likely be scrap.

-Chris

From: Jason Murdoch [mailto:jmurdoch@dartaero.com]
Sent: February 24, 2011 8:14 AM
To: 'Mike Petsche'; Cris Provencal
Cc: Linda lacelle; edowning@dartaero.com
Subject: D350-748-101 w/o 61764 x-tube pitt
Importance: High

Good morning,
I was asked this morning to follow up on the 350 x-tube that is in the paint dept with the pit mark above the bend radius. It is still there with no disposition. Does anyone have an update on what to do with this x-tube?
Please advise a.s.a.p. Thanks

Jason Murdoch
Quality Coordinator
jmurdoch@dartaero.com
DART Aerospace Ltd.
613-632-5200